KILO Subwoofers

General Features

* Heavy Duty Diamond Polished Cast Aluminum Basket
* High Energy Double Stacked 150 Oz. Strontium Magnet Structure
* Dual Impedance Black Anodized Former With EISV Voice Coil
* Poly Cotton Spider With Woven Round Tinsel Leads
* Semi Pressed Paper Cone
* Custom Tooled Tall/Narrow Foam Edge
* V-Shape Weaved Glassfiber Center Dustcap
* Custom Tooled Rubber Gasket
* Custom Tooled Bottom Plate To Insure Noise Free Ventilation

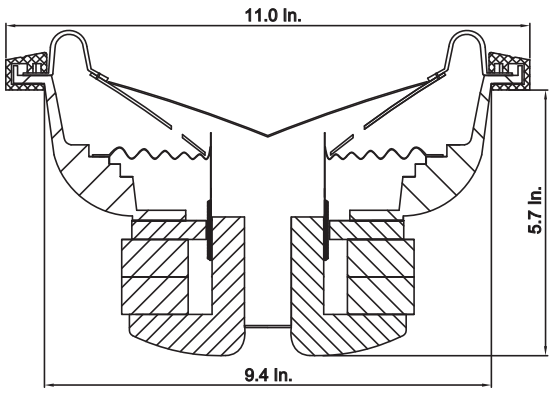

KILO 10

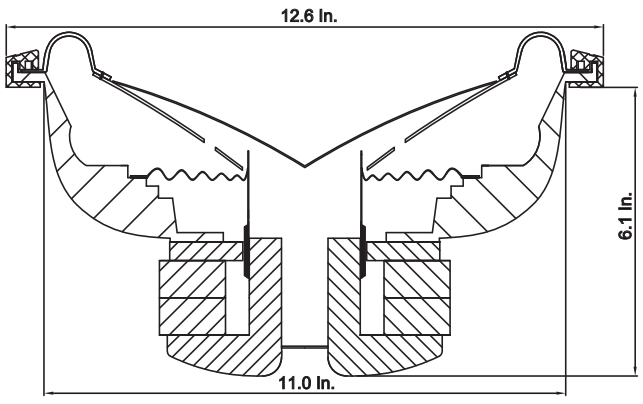

KILO 12

Specifications

CONFIGURATION		KILO 104			KILO 124			KILO 122		
Voice Coil		Dual 4 Ohm			Dual 4 Ohm			Dual 2 Ohm		
FS	Hz	41.57			43.8			39.00		
Qms		2.33			2.08			2.10		
Vas	liters	18.54			21.42			32.33		
Cms	um/N	99.05			56.95			85.94		
Mms	g	147.95			231.22			193.00		
Rms	Kg/s	16.56			30.00			22.51		
Xmax	mm	10.80			10.80			9.00		
Xmech	mm	16.20			16.200			13.50		
Dia.	mm	215.00			256.00			256.00		
Sd	sq.m	0.040			0.051			0.051		
Vd	liters	0.39			0.56			0.46		
ELECTRICAL		Individual	Parallel	Series	Individual	Parallel	Series	Individual	Parallel	Series
Qes		1.08	0.55	0.61	1.30	0.64	0.75	1.11	0.38	0.64
Re	ohms	3.60	1.80	7.20	3.60	1.80	7.20	2.00	1.00	4.00
Le	mH	0.66	0.68	3.10	0.66	0.69	3.15	0.38	0.36	1.71
BL	Tm	11.34	11.46	21.74	13.30	13.65	25.61	9.26	9.84	17.82
Pe	Watts	250	500	500	250	500	500	250	500	500
ELECTROMECANICAL		Individual	Parallel	Series	Individual	Parallel	Series	Individual	Parallel	Series
Qts		0.739	0.433	0.496	0.799	0.472	0.570	0.726	0.382	0.513
no	%	0.119	0.222	0.200	0.135	0.255	0.212	0.168	0.358	0.264
1-W-SPL	dB	82.8	85.5	85.0	83.3	86.0	85.3	84.3	87.6	86.2
2.8V SPL	dB	86.4	92.0	85.6	86.9	92.7	85.8	90.4	96.7	89.4

1000 PEAK WATTS

MASSIVE®

CE Loudspeaker Standard CEA-2031 Compliant RoHS E8

P.O. Box 252004 Los Angeles, CA 90025 U.S.A.
www.massiveaudio.com

KILO

For More Customized Box Volume Specifications
Please visit www.massiveaudio.com

	KILO 10	KILO 12
Mounting Depth (A)	5.7 In.	6.1 In.
Mounting Diamter (B)	11.0 In.	12.6 In.
Mounting cut diameter (C)	9.4 In.	11.0 In.
Net weight (Lb)	16.0	16.5
Displacement (ft3)	0.0963	0.143

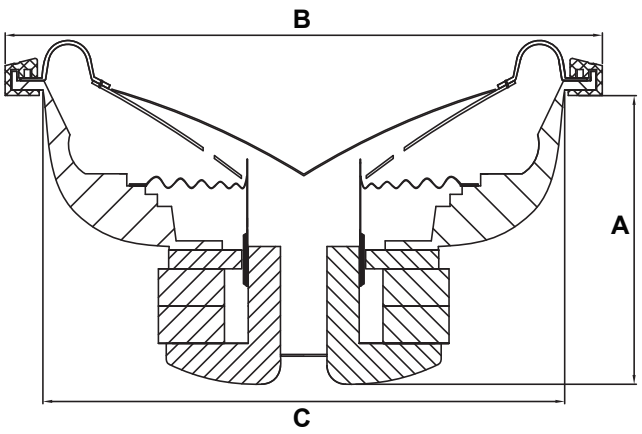

	Single Sub Enclosure			Dual Sub Enclosure		
	K 104	K 124	K 122	K 104	K 124	K 122
Sealed Volume (Ft3)	0.75	1	1	1.47	2	2
F3 (HZ)	46	45	45	46	45	45
Hight (H)	12	14	14	11	14	14
Width (W)	12	14	14	21	25	25
Depth (D)	14	14	14	12	15	15
Ported Volume (Ft3)	1	1.5	1.5	3	3	3
Hight (h)	12	14	14	11	14	14
Width (W)	17	16	16	25	30	30
Depth (D)	14	17.5	17.5	21	18	18
Tuning (Hz)	46	43	43	43	42	43
F3 (Hz)	34	32	32	31.5	31	33
Port Diameter (in)	4	4	4	4	4	4
Port length (in)	12	9	9	8	9	8
Number of Ports	1	1	1	2	2	2

* All measurments are rounded for ease of fabrication.
* All measurments are in inches.

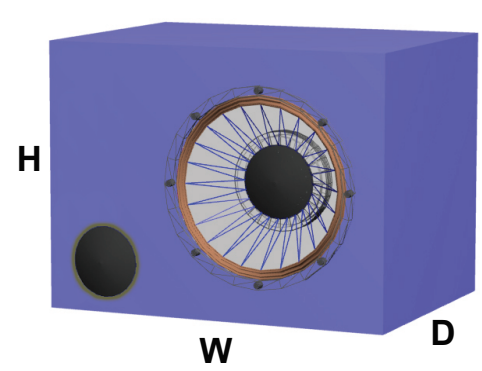

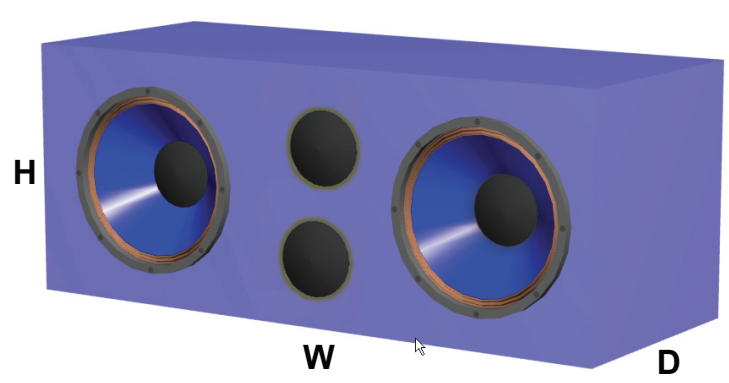

1000 PEAK WATTS

MASSIVE®

CE Loudspeaker Standard CEA-2031 Compliant RoHS E8

P.O. Box 252004 Los Angeles, CA 90025 U.S.A.
www.massiveaudio.com